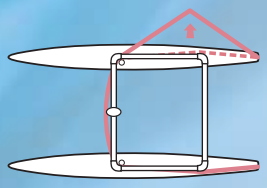

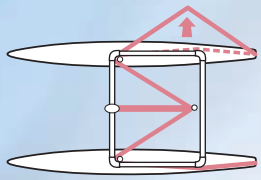

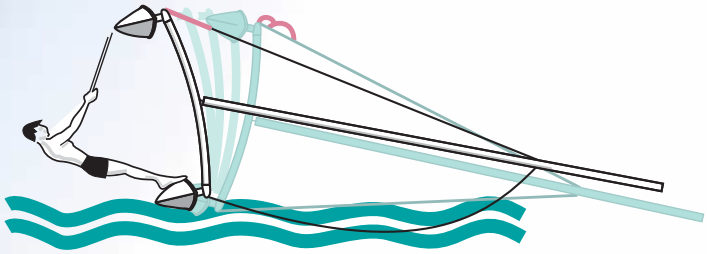

EASY RITE

Internal shock cord recoils this righting line automatically. Made from 1/2" hollow braid line with internal shockcord. It requires no blocks or shackles. Installs in minutes without tools. Also functions as crew safety line. Our best selling righting system.

30105 H14/16/17 **$61.99**
30106 H18/21 **$67.99**
30108 H20 **$77.99**
30109 Getaway **$58.99**

EASY UP

Favored Hawaiian style righting line system and trapeze safety line. (H14/16 only.) Retracts fully—it's there when you need it and out of the way when you don't. No tools required to install.

30101 H14/16 **$75.99**
30102 H18 **$81.99**

THE UPRIGHT SOLO RIGHTING SYSTEM

The Upright installs easily. No holes to drill, no measurements are needed. Attaches in five minutes to the existing shroud adjusters with a pair of pliers. Racing rules allow carrying the Upright for emergencies, but it may not be used while racing. The Upright is designed for a single reason, to make sailing your small catamaran safer.

1263 H16 **$137.00**
1264 H18/20 **$149.00**
1265 H17 **$137.00**

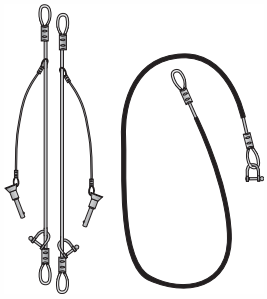

ANTI PITCH POLE HYDRO FOIL

A simple bow plane that attaches to the bow tang bolt. As the bow starts to dive the bow plane's 55 square inches of surface comes in contact with the water and halts the submerging of the bow before the deck goes under water. Easy to install or remove for racing. Makes sailing a lot more fun for the recreational sailor.

30110 H14/16 Pair **$128.00**

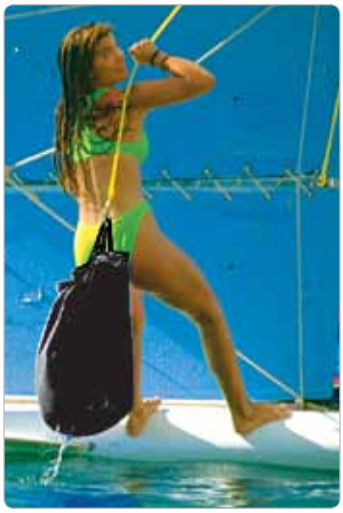

RIGHTING BUCKET

Simple, easy to carry, and easy to use. Comes complete with no-rot canvas bucket, premeasured line, shoulder pad (not shown) and snap. The righting bucket holds as much as 150 pounds of water to assist your body weight to right your catamaran.

30107 Kit **$72.99**

SHROUD EXTENDER

Tension and de-tension shrouds easily for the"perfect" rig tension. Use in conjunction with "shroud extending" righting systems for complete re-tensioning while out on the water. Requires shrouds be shortened. Check class rules for racing.

10049 Each **$69.99**

TECH TIP!

RIGHTING YOUR HOBIE

On that reach...flying through the air and water then...WHAM!!! Your Hobie Cat has forced you to swim instead of sail. Not really what you had in mind? if you have planned ahead you will be up and sailing again quickly. Whether sailing single handed or with a few friends, righting your boat can be quick and easy...

First, preventing your mast from becoming one with the bottom, or "turtling" is a priority. We at Hobie have designed mast floats to help keep your Hobie Cat from becoming a 'mudhen'. The floats attach to the top of your mast and will prevent the mast tip from sinking.

The next objective will be to get back to sailing! Righting systems vary a bit, but the theory is the same. A line is attached to your Hobie, thrown over the hull in the air and then weight (yours and or your friends) is used to lever the boat back to an upright and sailable position.

After you have checked that everyone is OK, turn your hulls and mast into the wind (see diagram) and uncleat your sails. You and your friend now need to congregate on the hull that is in the water. Grab the righting line, lean away from the trampoline and get as close to the water as you can. Try to stay out of the water. If you don't have enough body weight to right the cat we have the Righting Bucket! Just attach it to the boat, with the hook that is provided, throw over the upper hull and fill the bucket with water! With the bucket strap over your shoulder, lean your weight out from the boat. The bag comes clear of the water and up the cat will come!! Grab the dolphin striker or crossbar as it comes up, climb aboard, sheet in and GO!

Tipping your Hobie over can be a great way to cool off and enjoy the water... try it! It's excellent practice for when you weren't planning to go for a swim but your Hobie decided that you needed to cool off!

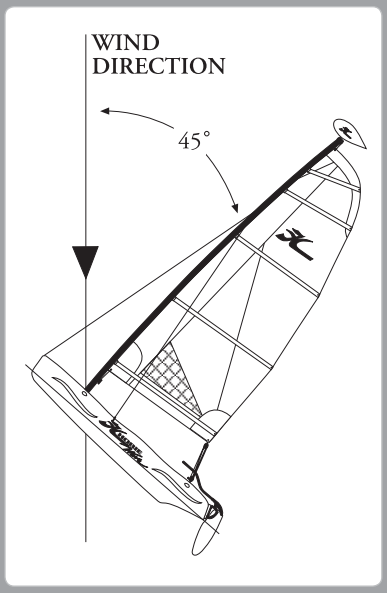

30112 "Mama Bob Kit" Shaft Mount
30119 "Mama Bob" Bracket Mount

30115 "Baby Bob"

UNIVERSAL MAST FLOAT

"Mama Bob" Helps to prevent turtling. Displaces 59 pounds of water to help keep the mast from going full turtle (mast straight down). The Hobie mast float will give you the time you need when preparing to right the boat without the worry of going turtle. It also helps prevent damage to your rig and sails that can be caused if the mast head contacts the bottom when capsized. This streamlined float is shaft mounted to the side of any mast and is easily removed for racing or trailering. This float is contoured and held in alignment with the mast for minimum drag while sailing. Includes shaft mount hardware and fasteners.
30112 Fits all cats **$239.00**

MAST FLOAT

"Baby Bob" Designed by the Hobie Cat team to offer the safety and security of mast head flotation while limiting the resistance (drag) through the air. The Hobie mast float can give you the time you need to prepare to right the boat without the worry of going turtle (mast straight down). This also helps prevent damage to your rig and sails that can be caused if the mast comes in contact with the bottom when capsized. This mast float is standard on all Hobie Waves. It is fixed in position to the mast head and rotates with the mast. Displaces 32 pounds of water and measures 1/2 cubic foot in volume. Bracket mounting allows easy removal for racing or trailering. Kit includes mounting brackets and fasteners.
30115 Wave, H14, H16 **$129.00**

MAST FLOAT

"Mama Bob" Float (Standard on the Getaway) offers more flotation volume while using the same mounting system. Displaces 59 pounds of water (just under 1 cubic foot in volume). Mama Bob has nearly the same vertical dimension as the Baby, but it is wider. More volume further inhibits a boat from going turtle when capsized in rough and windy conditions. Kit includes mounting brackets and fasteners.
30119 Getaway **$149.00**